ASHE WORKSHOP

STRUCTURE CONTROL TOPICS

RON SCHRECKENGOST, PE AND DOUG ZUBAL, PE

NOVEMBER 8, 2023

pennsylvania
DEPARTMENT OF TRANSPORTATION

1

SEQUENCING

2

EQUIPMENT LOCATION

- Cranes: demo and erection
- Predrilling holes for piles
- Pile driving
- Concrete pump trucks and telebelts

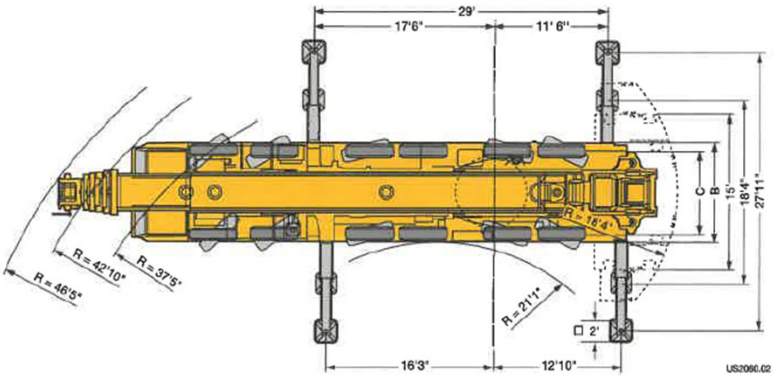

3

EQUIPMENT LOCATION

4

EXISTING STRUCTURE CONDITION

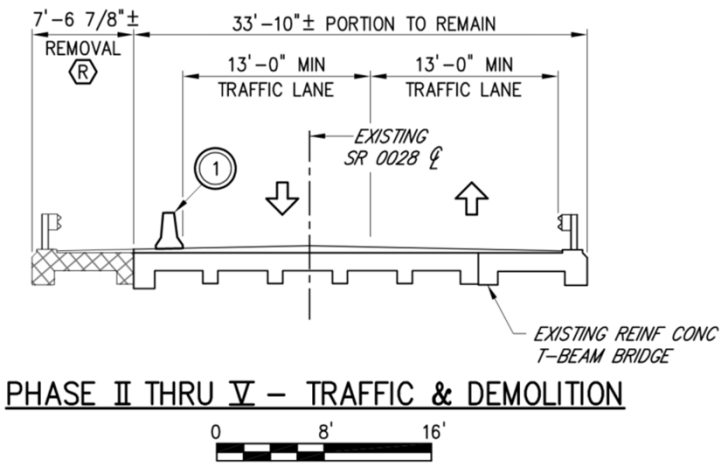

5

EXISTING STRUCTURE CONDITION

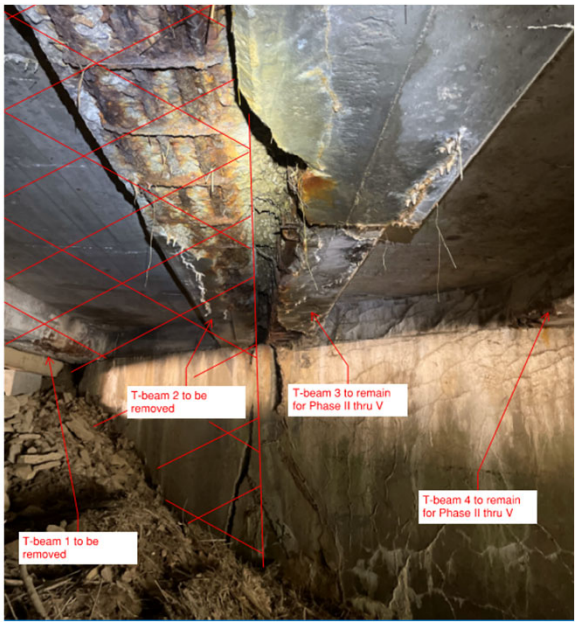

6

EXISTING STRUCTURE CONDITION

7

EXISTING STRUCTURE CONDITION

8

PIPE CULVERT

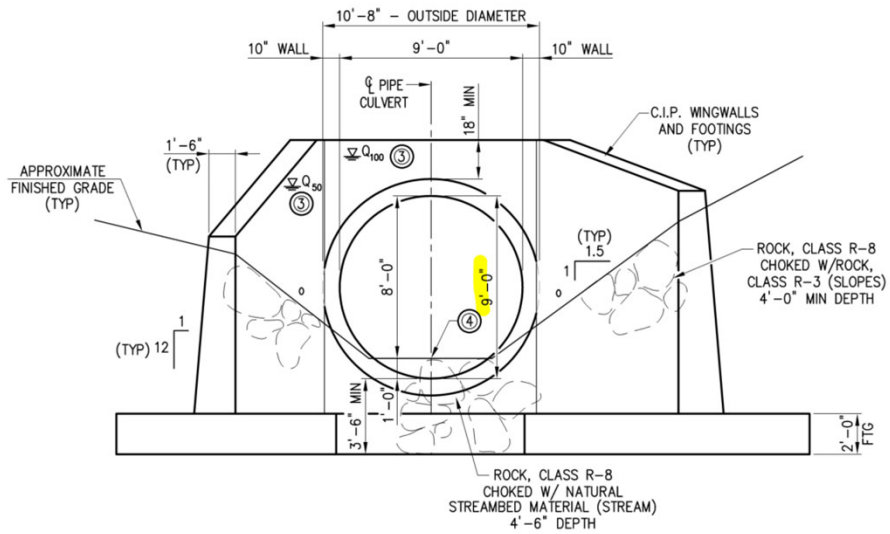

TYPICAL END SECTION VIEW

9

PIPE CULVERT

TABLE A ROUND PIPE**		
Diameter (inches)	**Joint Gap Installation Allowance (inches)**	**Maximum Joint Gap Allowance (inches)**
12-36	0.700	1.000
42-54	0.800	1.200
60-72	0.850	1.275
78-90	0.900	1.350
96	1.000	1.500

No joint gap requirements for 108” pipe.

10

PIPE CULVERT

11

RIP RAP AT CULVERT

12

RIP RAP AT CULVERT

13

RIP RAP AT CULVERT

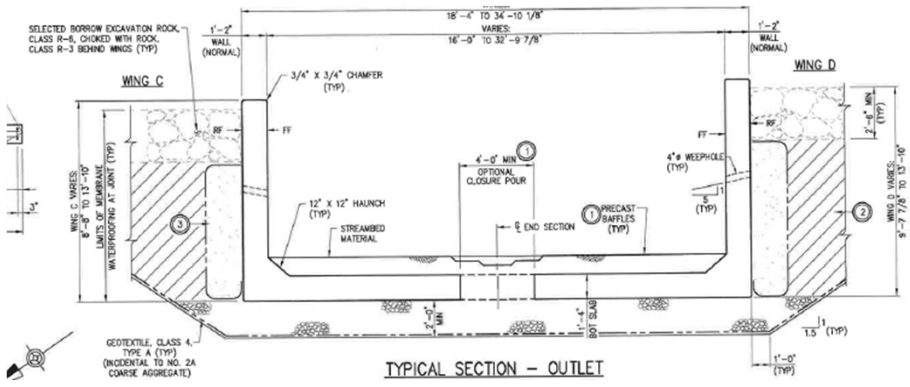

14

RIP RAP AT CULVERT

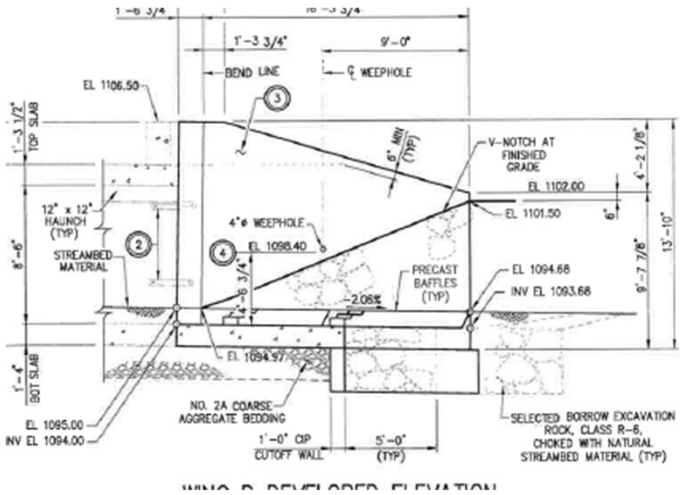

15

16

17

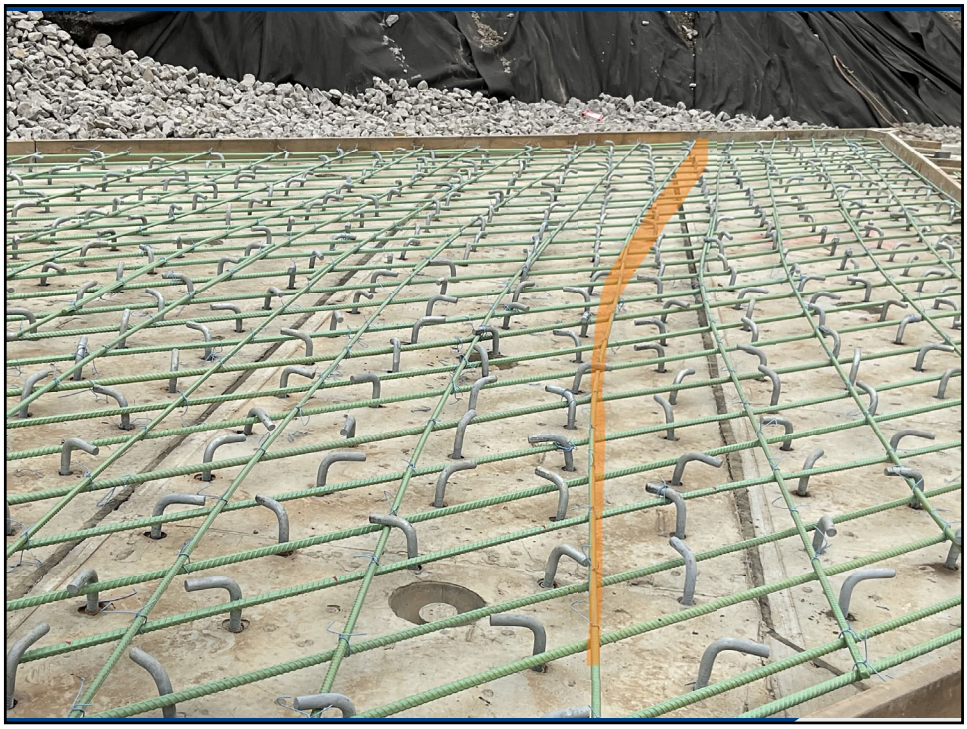

18

DEMOLITION

19

DEMOLITION

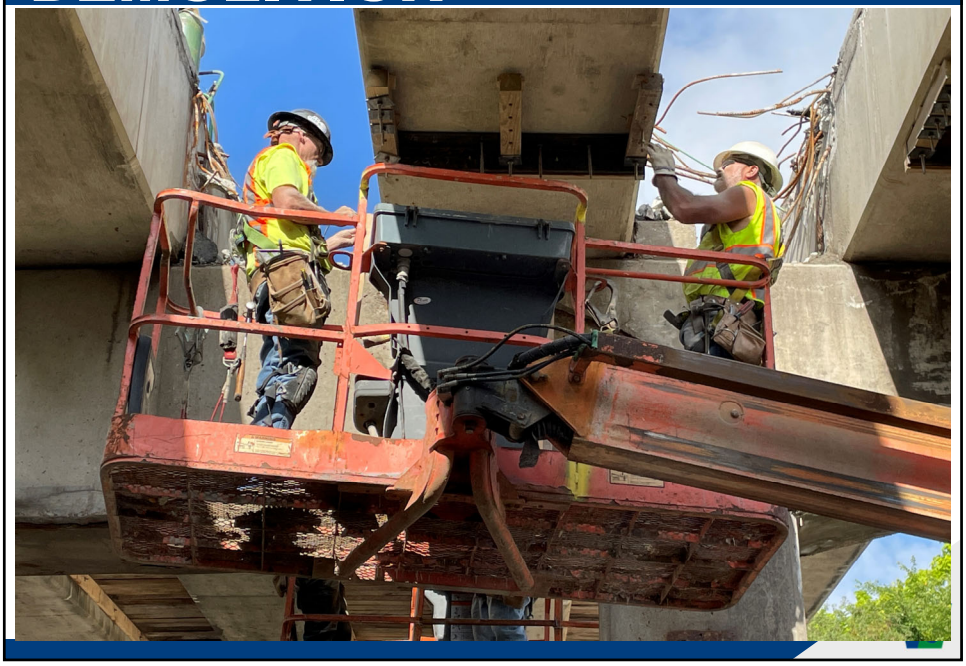

20

FABRICATION ISSUE

21

FABRICATION ISSUE

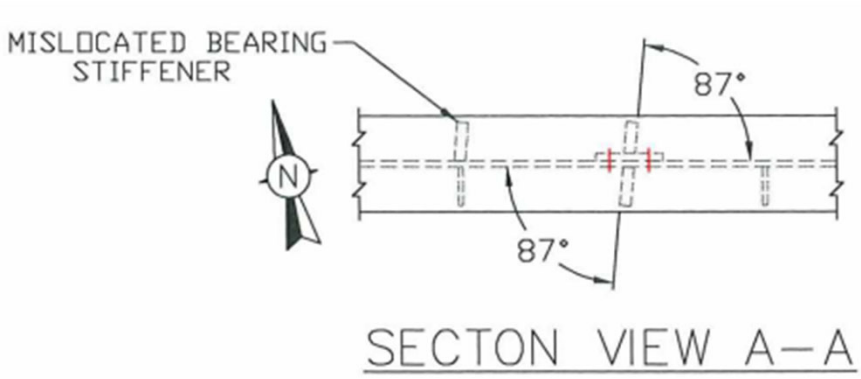

22

FABRICATION ISSUE

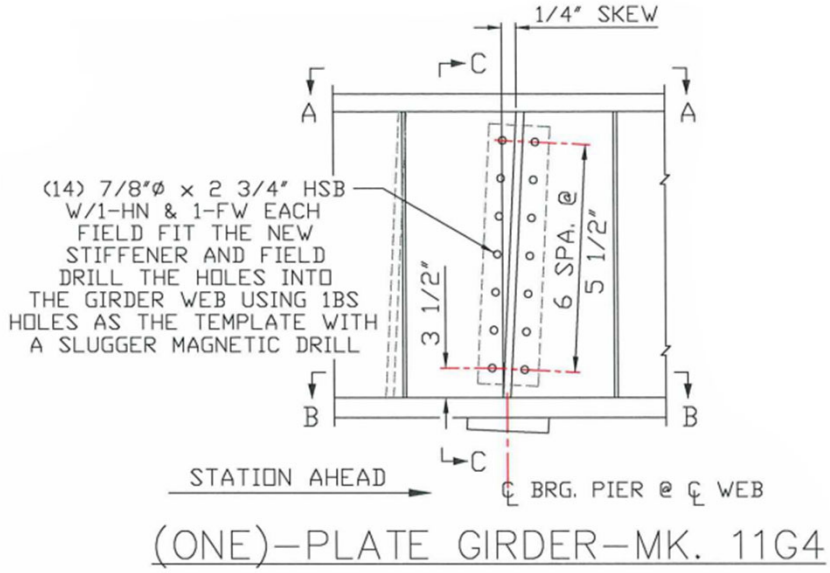

23

WORKMANSHIP

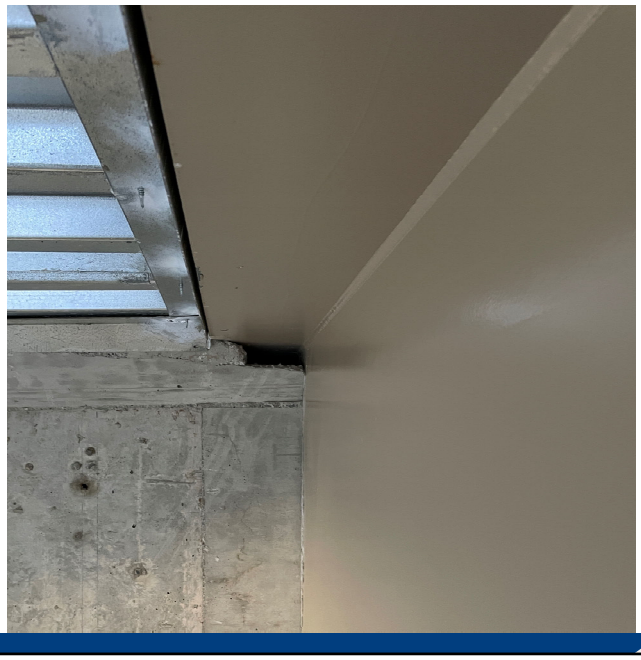

24

WORKMANSHIP

25

WORKMANSHIP

26

WORKMANSHIP

27

WORKMANSHIP

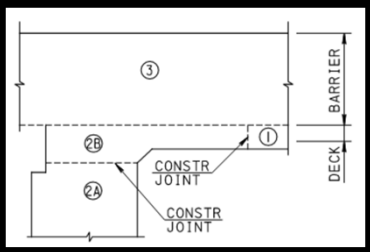

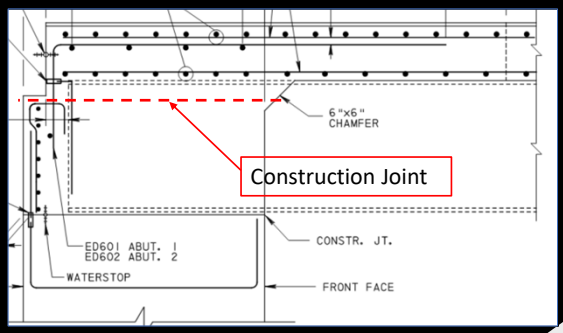

28

ANCHOR BOLTS

29

ANCHOR BOLTS

30

REHAB ISSUES

31

REHAB ISSUES

32

REHAB ISSUES

33

DECK PLACEMENT

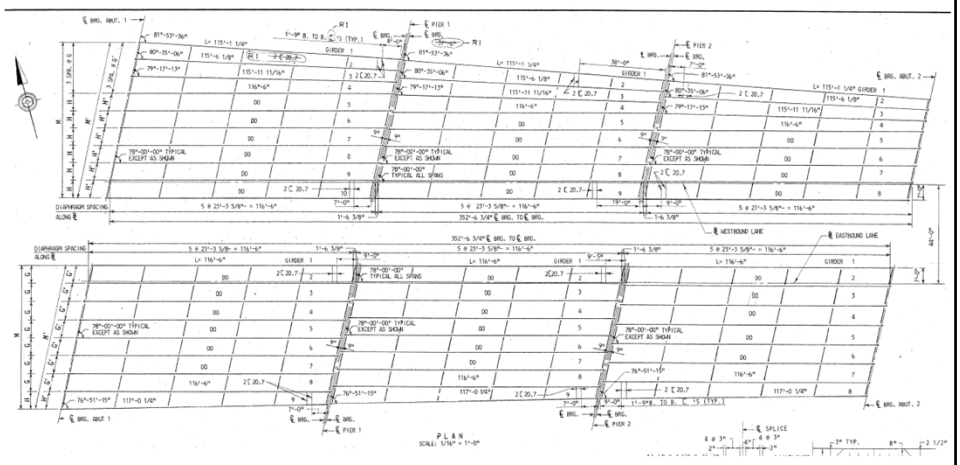

34

DECK PLACEMENT

35

REBAR

36

ERECTION PLANS

37

ERECTION PLANS

38

ADDITIONAL TOPICS

Painting
- Organic vs. Inorganic paint systems for painting in the field
- Faying surfaces

Updating projects to current standards
- For projects that were designed over a long period of time, make sure that projects are using current design standards.
- For example, guiderail and barrier.

Consider fabrication tolerances
- Camber tolerance for steel and prestressed concrete beams. This summer, beams with extra camber but within tolerance caused issues with setting SIP forms.

39

QUESTIONS

40